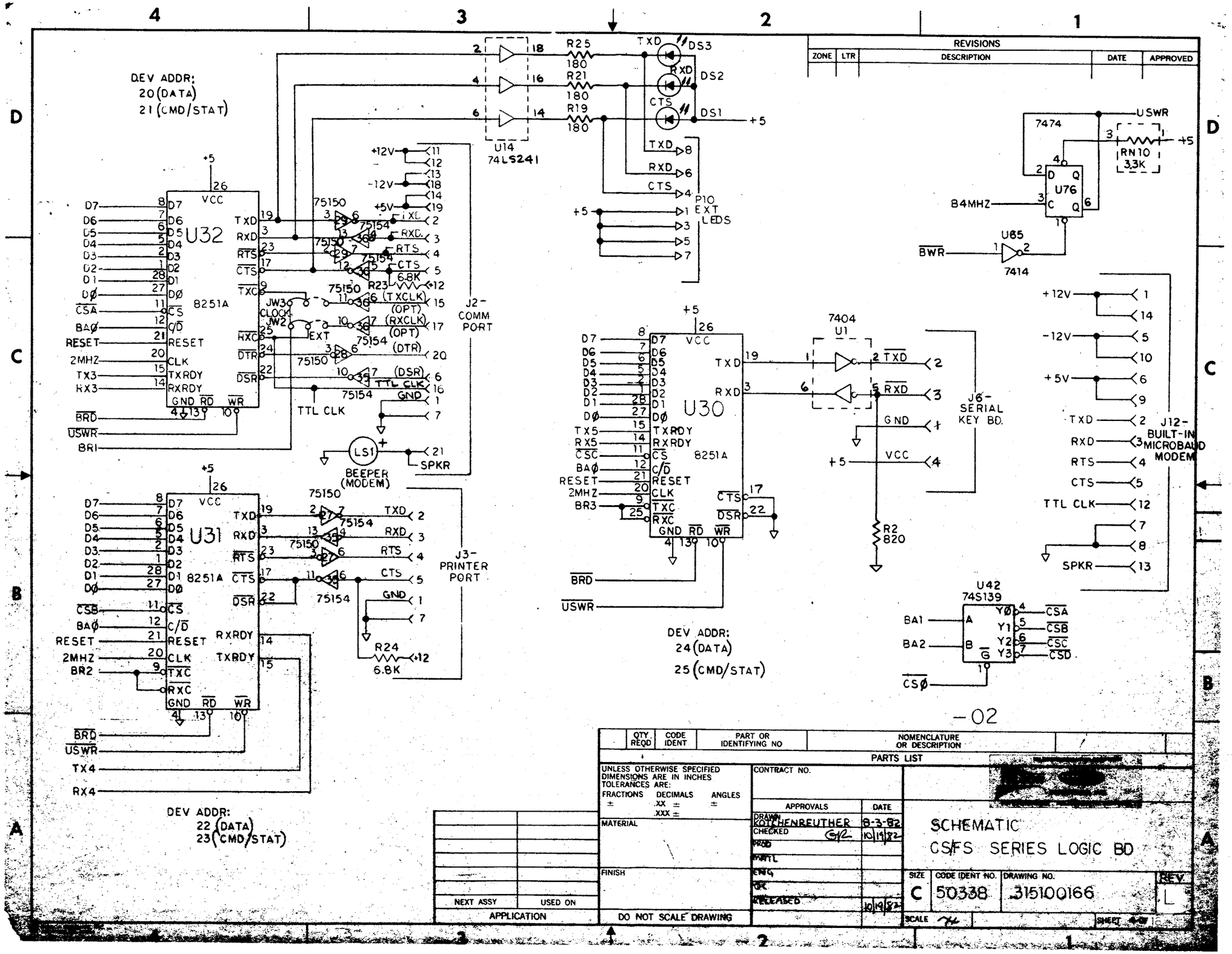

REVISIONS

ZONE	LTR	DESCRIPTION	DATE	APPROVED

QTY REQD	CODE IDENT	PART OR IDENTIFYING NO	NOMENCLATURE OR DESCRIPTION

PARTS LIST

UNLESS OTHERWISE SPECIFIED DIMENSIONS ARE IN INCHES TOLERANCES ARE:
FRACTIONS ± DECIMALS .XX ± .XXX ± ANGLES ±

MATERIAL

FINISH

DO NOT SCALE DRAWING

CONTRACT NO.

APPROVALS	DATE
DRAWN KOTCHENREUTHER	8-3-82
CHECKED GR	10/19/82
PROD	
MATL	
ENG	
QC	
RELEASED	10/19/82

SCHEMATIC
CS/FS SERIES LOGIC BD

SIZE	CODE IDENT NO.	DRAWING NO.	REV
C	50338	315100166	L

SCALE 1/4 SHEET 4 OF 16

NEXT ASSY	USED ON
APPLICATION	